SERVICE MANUAL

FISHER

MT-M21

Stereo Turntable

(EUROPE)

134 076 42 (Black)
134 076 43 (Silver)
134 076 44 (Red)

CONTENTS

Arm Feed Cord Stringing 2
Specifications 3
IC Signal Flow & Equivalent Circuit 4
Cabinet & Chassis Exploded View 5,6
Cabinet & Chassis Parts List 7,8
Turntable Adjustments 9,10
Printed Circuit Board (Bottom View) 11,12,13,14
P.C.Board Parts List 15,16,17
Semiconductor Lead Identification 18
Schematic Diagram 19,20
Point to Point Wiring Diagram 21,22

ARM FEED CORD STRINGING

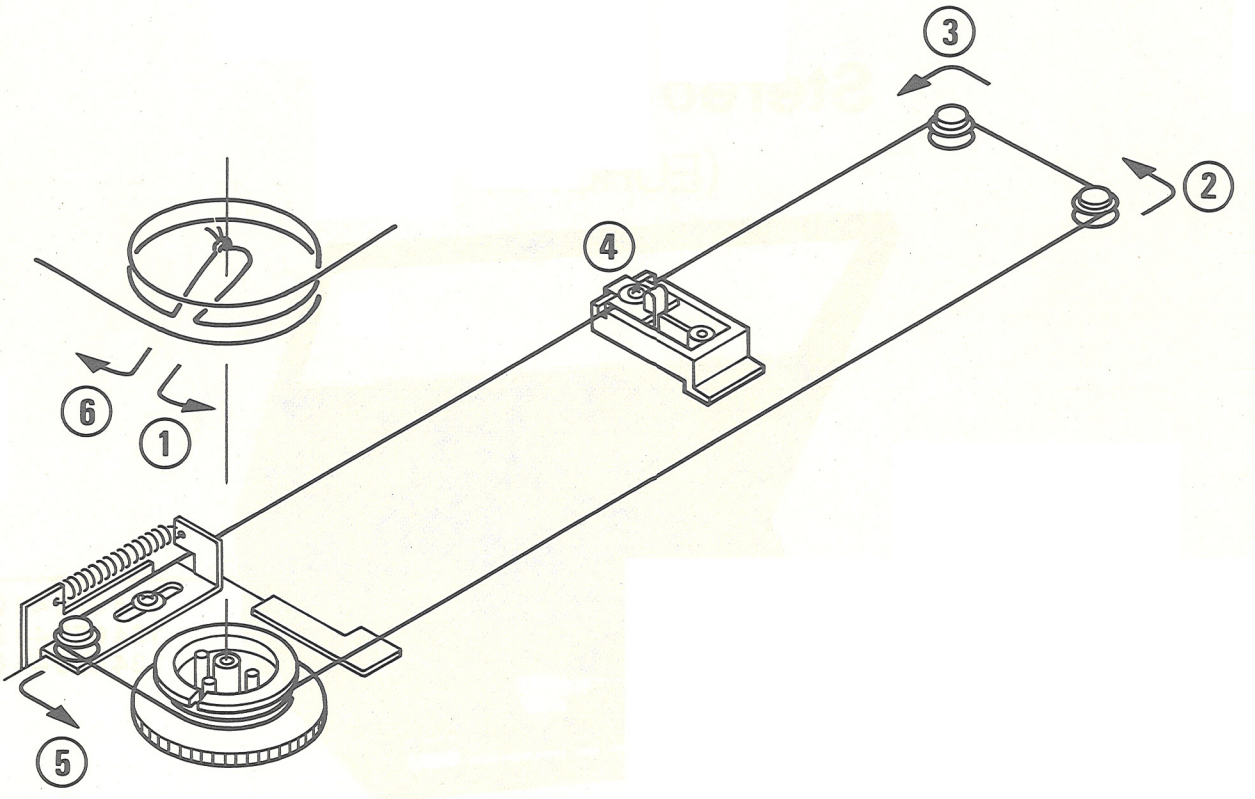

SPECIFICATIONS

TURNTABLE	MT-M21
Motor	DC Servo
Drive System	Belt
Wow and Flutter (WRMS)	0.08 %
Rumble (DIN B)	−65 dB
Speed Variation	±1.5 %
Tracking Force	0.6 – 2 g
Platter Diameter	300 mm
Platter Weight	0.4 kg
Record Speed Selector	33-1/3 rpm/ 45 rpm
Operation	Full Auto Linear Tracking
GENERAL Dimensions (W x H x D)	335 x 92 x 345 mm
Weight (approx.)	3 kg

Because its products are subject to continuous improvement, Fisher Corporation reserves the right to modify product designs and specifications without notice and without incurring any obligation.

IC SIGNAL FLOW & EQUIVALENT CIRCUIT

CONTROL IC LM 6416 E

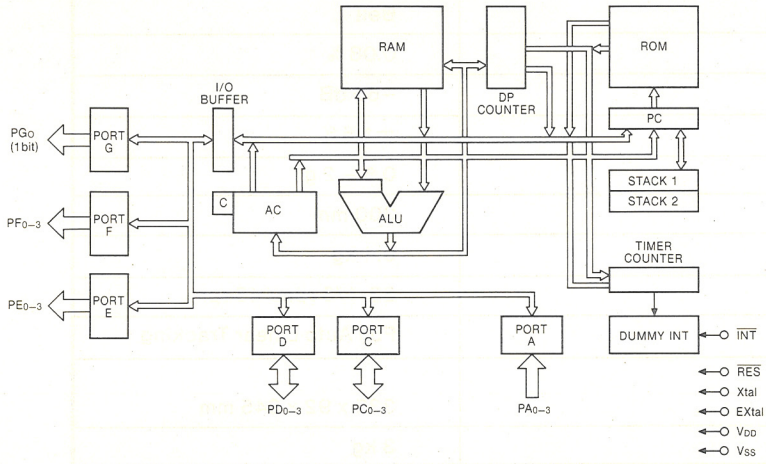

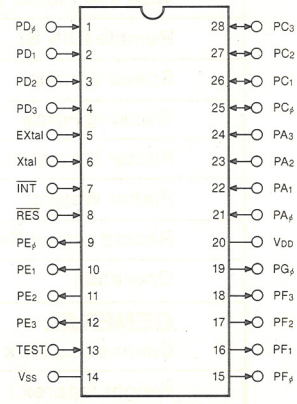

VOLTAGE REGULATOR IC NJM 7812

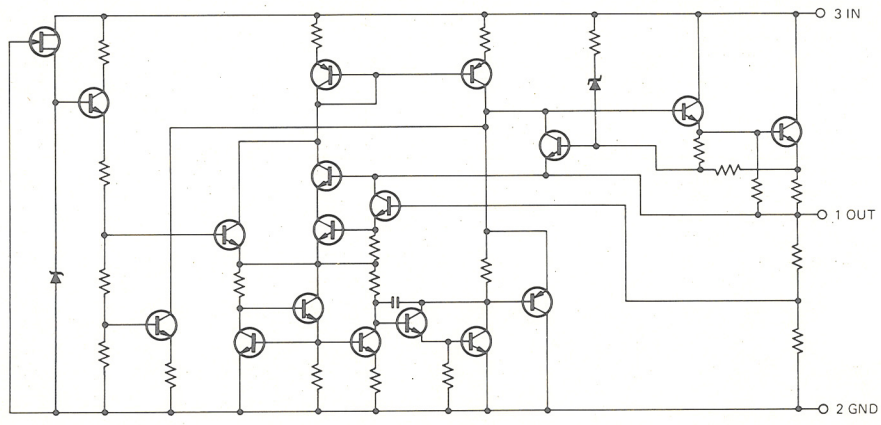

VOLTAGE REGULATOR IC NJM 7912

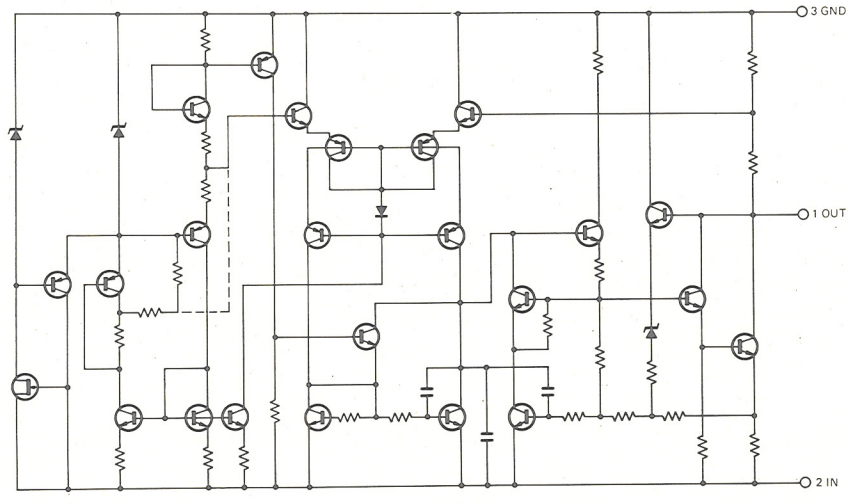

CABINET & CHASSIS EXPLODED VIEW

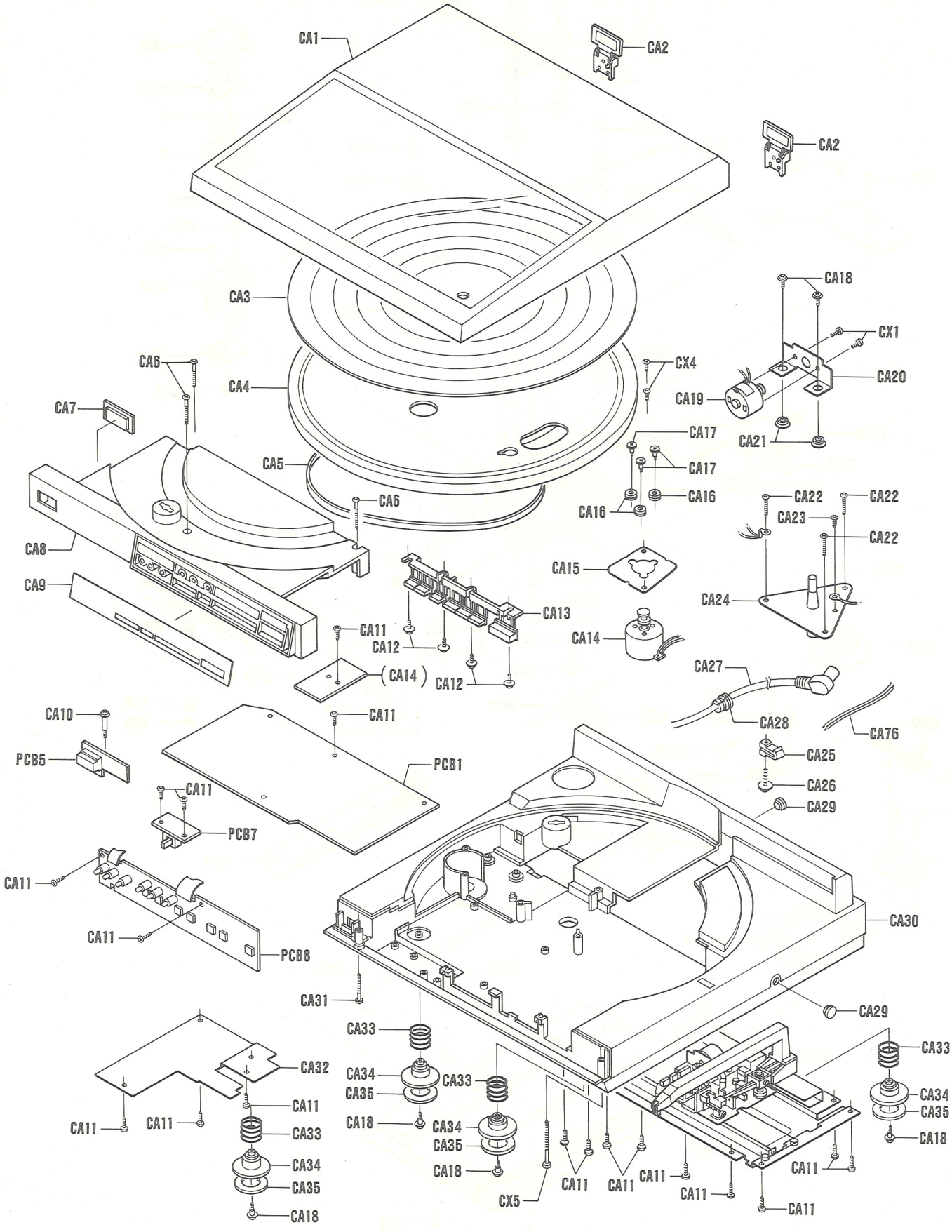

CABINET & CHASSIS EXPLODED VIEW (Continued)

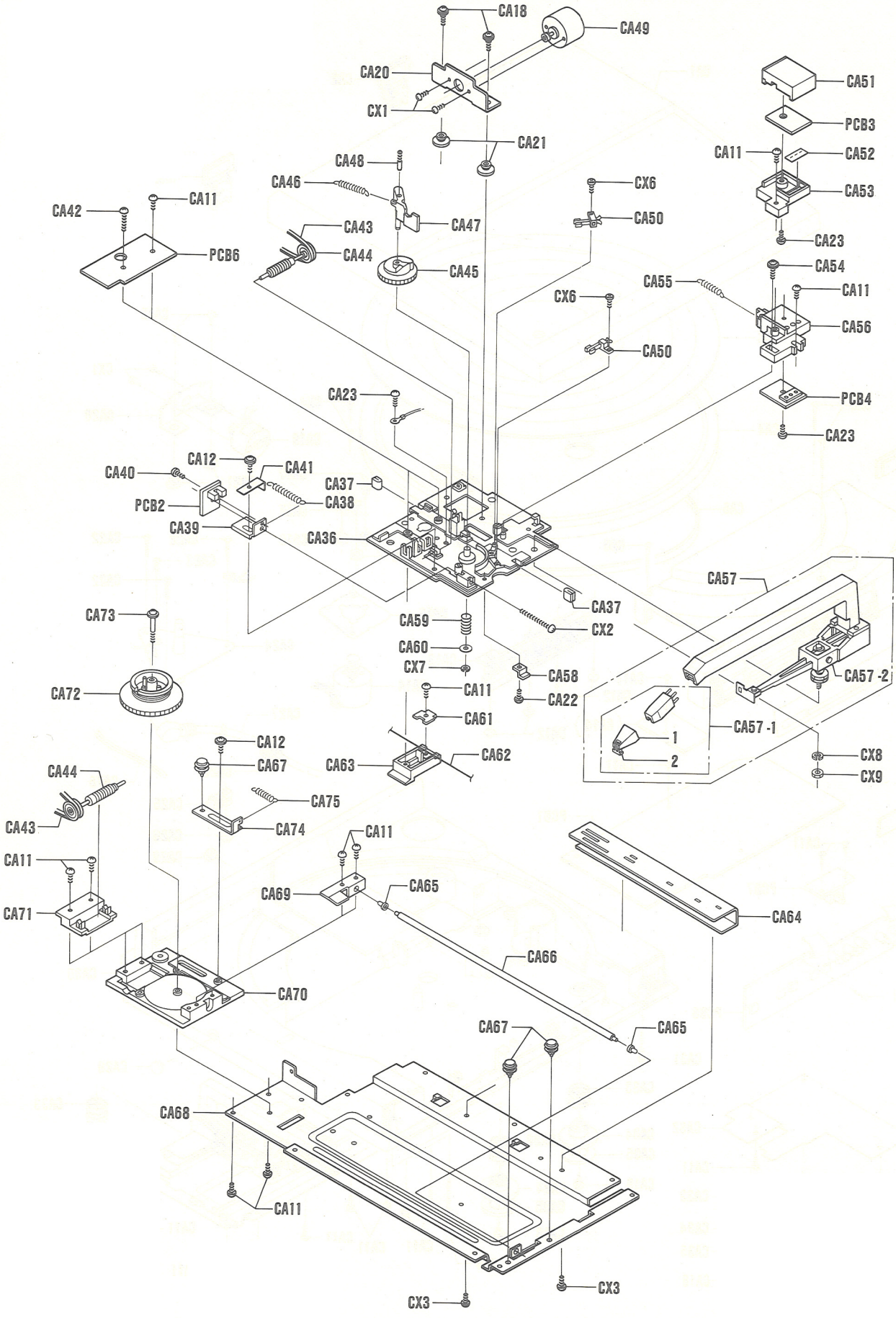

CABINET & CHASSIS PARTS LIST

Ref. No.	Part No.	Description	Q'ty
	PACKAGE		
	131 2 3901 10300	Staple SS19MM	8
	131 6 2119 02081	Bag Polyethylene-exp	1
	131 6 2519 00201	Bag Polyethylene Ind	1
	131 6 3069 17050	Patching Sheet	1
	131 6 4559 10900	Manufacturing No.	2
	141 2 4219 32700	Screw Transit	1
	141 6 1139 95006	Box Corrugate-Exp (Black)	1
	141 6 1139 95007	Box Corrugate-Exp (Silver)	1
	141 6 1139 95008	Box Corrugate-Exp (Red)	1
	141 6 3119 23100	Pad Front	1
	141 6 3119 23200	Pad Rear	1
	141 6 3119 23401	Pad	1
	141 6 3119 23500	Pad	1
	141 6 3119 25600	Pad	1
	141 6 3319 13200	Spacer	3
	ACCESSORIES		
	131 2 3901 10400	Staple No.10	1
	131 6 2719 10801	Bag Fan	1
	131 6 4519 15700	Guarantee Cert	1
	131 6 4559 10900	Manufacturing No	1
	134 2 2901 11601	Adapter EP	1
	142 6 4119 32131	Explanatory Booklet	1
	CABINET		
	141 6 4729 37561	Caution Label	1
	131 2 1310 30739	Name Plate	1
	131 2 3608 12405	Cramp Wire	1
	131 6 4559 10900	Manufacturing NO	1
	134 6 4739 13403	Stylus Label	1
	141 2 1449 62900	Label	1
	4 2359 75220	Connector 12P Assy (Cont. – Terminal PCB) [CN01]	1
	4 2359 76743	Connector 4P Assy (Motor PCB) [CN02]	1
	4 2359 76794	Connector 3P Assy [CN04]	1
	4 2359 77005	Connector 1P Assy	1
	4 2359 77142	Connector 1P Assy (Cont. PCB)	1
	4 2359 77145	Connector 1P Assy (Terminal PCB)	1
	131 2 3608 14100	Cramp Wire	3
CA1	141 0 1249 30500	Lid Assy (Black)	1
CA1	141 0 1249 30501	Lid Assy (Silver)	1
CA1	141 0 1249 30502	Lid Assy (Red)	1
CA2	131 0 2002 16801	Hinge Assy	2
CA3	134 2 6102 15700	Mat Turntable	1
CA4	141 2 5229 00200	Turntable	1
CA5	134 2 6302 11500	Belt	1
CA6	131 2 4201 19507	Screw, Button Hd. Tapping-B	3
CA7	141 2 1329 13300	Filter	1
CA8	141 2 1219 26803	Panel Front (Black)	1
CA8	141 2 1219 26804	Panel Front (Silver)	1
CA8	141 2 1219 26805	Panel Front (Red)	1
CA9	141 2 1439 12801	Panel Control (Black/Red)	1
CA9	141 2 1439 12800	Panel Control (Silver)	1
CA10	134 2 4106 27000	Shaft	1
CA11	131 2 4201 19501	Screw, Button Hd. Tapping-B	28
CA12	131 2 4201 21100	Screw	6
CA13	141 2 1659 24800	Knob	1
CA14	134 0 5011 03500	Motor Assy [M01]	1
	4 5272 00190	Comutate MTR Magnet (Phono)	1
	134 2 6401 14400	Pulley Motor	1
	141 0 1939 02790	Motor P.C.B. Assy	1

Ref. No.	Part No.	Description	Q'ty
CA15	141 2 3169 23300	Metal Mount Motor	1
CA16	134 2 5202 11800	Rubber Cushion	3
CA17	134 2 4201 13600	Screw	3
CA18	134 2 4201 13400	Screw	8
CA19	4 5272 00181	Comutate MTR Magnet (Arm) [M03]	1
CA20	141 2 3519 67100	Angle Mount(Motor)	2
CA21	141 2 4459 31800	Cushion	4
CA22	131 2 4201 19502	Screw, Button Hd. Tapping-B	4
CA23	131 2 4201 19500	Screw, Button Hd. Tapping-B	4
CA24	141 0 7519 03900	Shaft Turntable Complet	1
CA25	131 2 3608 11000	Cramp Wire	1
CA26	131 2 4201 25203	Screw, Brazier Hd. Tapping, +M3.0x16	1
CA27	4 2369 74240	Plug Cord Din8p L	1
CA28	131 2 6111 14700	Bushing	1
CA29	131 2 2904 11001	Pad Lid (Black/Silver)	2
CA29	131 2 2904 11000	Pad Lid (Red)	2
CA30	141 2 1119 99704	Cabinet (Black)	1
CA30	141 2 1119 99700	Cabinet (Silver)	1
CA30	141 2 1119 99701	Cabinet (Red)	1
CA31	141 2 4219 09601	Screw	1
CA32	141 2 1149 35000	Cover	1
CA33	141 2 8559 06500	Spring Mounting	4
CA34	141 2 4459 31700	Cushion(Leg)	4
CA35	131 2 5203 23603	Felt	4
CA36	141 0 3129 01900	Unit Plate Assy	1
CA37	141 2 4459 33800	Cushion	2
CA38	141 2 8519 31900	SPG Slide Base	1
CA39	141 2 3519 67400	Angle Mount(Photo C)	1
CA40	131 2 4201 20800	Screw, +M2.6x6	1
CA41	141 2 8539 53800	Spring Plate	1
CA42	131 2 4201 19504	Screw, Button Hd. Tapping-B	1
CA43	141 2 5649 22600	Belt	2
CA44	141 0 5519 10300	Worm Assy	2
CA45	141 2 5519 52100	Worm Wheel(A)	1
CA46	141 2 8519 60000	Spring Plate	1
CA47	141 2 7519 64000	Spindle Lifting	1
CA48	134 2 4201 12800	Screw	1
CA49	4 5272 00180	Comutate MTR Magnet (Lifter) [M02]	1
CA50	4 2319 76680	Leaf Switch (Lift Down) [SW09]	1
CA50	4 2319 76680	Leaf Switch (Lift Up) [SW10]	1
CA51	141 2 3519 66900	Cover(Holder)	1
CA52	141 2 3519 67500	Plate(Filter)	1
CA53	141 2 3519 66800	LED Holder	1
CA54	141 2 4219 06300	Screw	1
CA55	134 2 5101 32400	Spring	1
CA56	141 2 3519 67000	LED Holder Base	1
CA57	141 0 6419 00502	Pick-up Assy (Black/Red)	1
CA57	141 0 6419 00503	Pick-up Assy (Silver)	1
CA57-1	4 1579 27031	Cartridge(MG-37I)	1
1	4 1579 29451	Stylus(ST-37ID)	1
2	134 2 1402 12700	Retainer Needle	1
CA57-2	141 0 6419 00802	Tone Arm Assy (Black/Red)	1
CA57-2	141 0 6419 00803	Tone Arm Assy (Silver)	1
CA58	134 2 4108 27801	Plate	1
CA59	134 2 5101 26500	Spring	1
CA60	141 2 4579 05000	Washer, M3.2x10x0.2	1
CA61	141 2 3519 70300	Angle Mount	1
CA62	131 2 4112 10200	Rope	
CA63	141 2 7319 58000	Holder Slide	1
CA64	141 2 3169 23100	Guide Angle	1
CA65	141 2 4459 33200	Cushion	2
CA66	141 2 5289 01300	Rail	1
CA67	131 0 3020 11800	Pully Assy	3
CA68	141 2 1259 06200	Plate Bottom	1

CABINET & CHASSIS PARTS LIST (Continued)

Ref. No.	Part No.	Description	Q'ty
CA69	141 2 3519 69100	Angle Mount	1
CA70	141 2 3169 23200	Frame	1
CA71	141 2 5739 07000	Support Shaft	1
CA72	141 2 5519 52200	Worm Whell(C)	1
CA73	134 2 4106 27000	Shaft	1
CA74	141 2 3519 69000	Angle Mount	1
CA75	141 2 8519 33300	SPG Lock Caset Case	1
CA76	4 2369 74062	Plug Cord	1
CX1	101 3 1302 00311	Screw, Pan Hd., +M2.0x3	4
CX2	101 3 1303 03011	Screw, Pan Hd., +M3.0x30	1
CX3	103 3 1303 00511	Screw, Pan Hd. Tapping-2, +M3.0x5	2
CX4	102 3 1703 00811	Screw, Bind Hd. Tapping-1, +M3.0x8	2
CX5	143 3 1303 02511	Screw, Pan Hd. Tapping-B, +M3.0x25	1
CX6	143 3 1702 00818	Screw, Bind Hd. Tapping-B, +M2.0x8	2
CX7	112 3 1302 00011	E Ring, M2.0	1
CX8	110 3 2104 00011	Spring Washer-2, M4.0	1
CX9	106 3 1204 00311	Hex. Nut-2, M4.0	1
PCB1	141 0 1939 02743	Control P.C.B. Assy	1
PCB2	141 0 1939 02710	PCR P.C.B. Assy	1
PCB3	141 0 1939 02721	PTR P.C.B. Assy	1
PCB4	141 0 1939 02731	LED P.C.B. Assy	1
PCB5	141 0 1939 02750	Power Indicator P.C.B. Assy	1
PCB6	141 0 1939 02760	Terminal P.C.B. Assy	1
PCB7	141 0 1939 02770	Speed Switch P.C.B. Assy	1
PCB8	141 0 1939 02780	Switch P.C.B. Assy	1

1. Parts order must contain Model Number, Part Number and Description.
2. Ordering quantity of screws and resistors must be multiple of 10 pcs.

TURNTABLE ADJUSTMENTS

Stylus Pressure Adjustment

1. Place the unit on a horizontal plane and remove the lid.
2. Turn on the Power switch of the unit.
3. Press ◄ button on the control panel to shift the tonearm to the place as indicated in Fig. 1.
4. Turn the stylus pressure adjustment screw as shown in Fig. 2 through the stylus pressure adjustment hole, so that the stylus pressure meter indicates 1.8 ~ 2.2 g.

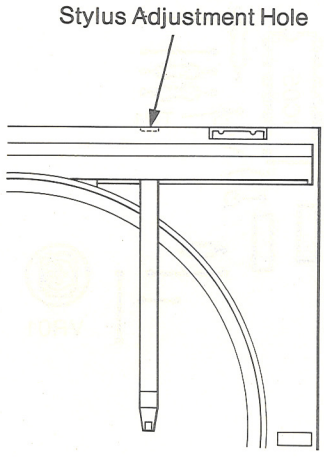

Fig. 1

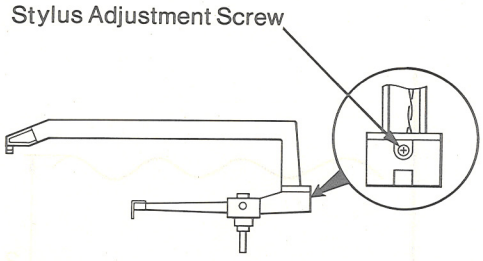

Fig. 2

Tonearm Position Adjustment

1. Turn on the power switch of the unit.
2. Remove the lid and the turntable.
3. Press ◄ button on the control panel to shift the arm to the place where the tonearm position adjustment cam can be observed. (Fig. 3)
4. Adjust the cam, so that the tonearm becomes perpendicular to the rear wall of the cabinet. (Fig. 3)

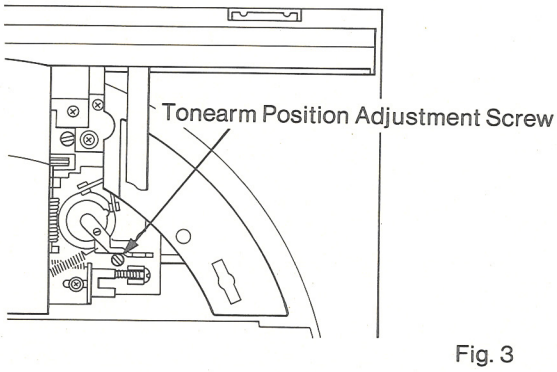

Fig. 3

Stylus Height Adjustment

1. Turn on the power switch of the unit.
2. Remove the lid and the turntable.
3. Press ◄ button on the control panel to shift the arm to the place where the stylus height adjustment screw can be observed. (Fig. 4)
4. Adjust the stylus height to 6mm±0.5mm above the turntable.

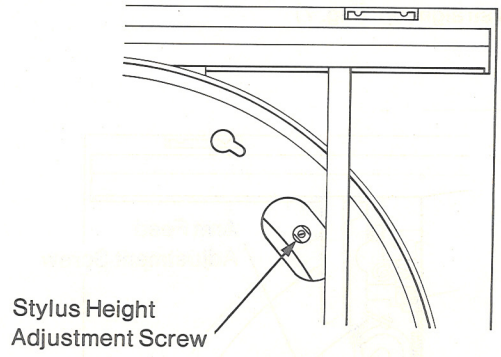

Fig.4

Rotation Adjustment

1. Turn on the power switch of the unit.
2. Use the stroboscope sheet and adjust each volume to obtain proper rotations per minute. (Fig. 5)
   Note: In the first instance, perform the adjustment for 45 r.p.m.

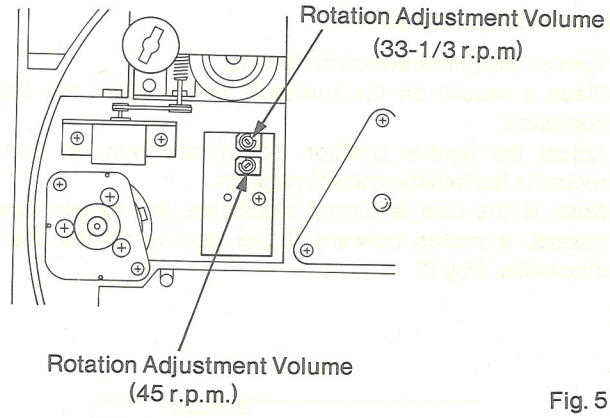

Fig. 5

Arm Trace Adjustment

1. Turn on the power switch of the unit.
2. Place a record on the turntable and trace the silent groove on the last portion of the record.
3. If the groove is not traced correctly, cut off R29 (3.3kΩ) on the Control P.C.Board and re-check the tracing. (Fig. 6)

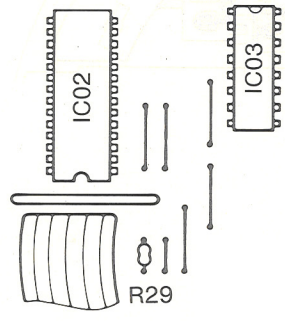

Fig. 6

TURNTABLE ADJUSTMENTS (Continued)

Photointerrupter Position Adjustment for Arm Feed

1. Turn on the power switch of the unit.
2. Place a record with less eccentricity on the turntable and play it.
3. After the record has rotated three or four times, raise the arm by pressing the CUEING button.
4. Turn the arm feed adjustment screw with a screwdriver through the hole on the right side of the cabinet, so that the arm rises straight up. (Fig. 7)

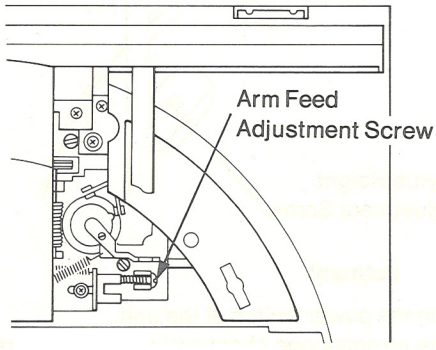

Fig. 7

Lead-in Position Adjustment

1. Turn on the power switch of the unit.
2. Place a record on the turntable and perform the lead-in operation.
3. Adjust the lead-in position adjustment cam, so that the record is led into the correct position.
   Note: If the cam is turned clockwise, the tonearm moves inward. It moves outward if the cam is turned counter-clockwise. (Fig. 8)

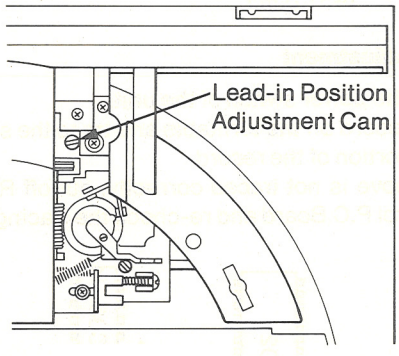

Fig. 8

End Return Sensitivity Adjustment

1. Turn on the power switch of the unit.
2. Connect the oscilloscope to TP1. (Fig. 9)
3. Play a record and adjust VR01 (100 K-B), so that the peak value of the DC element becomes 2.6 ~ 2.8V. (Fig. 10)
4. Confirm that the END Return is smoothly exercised.

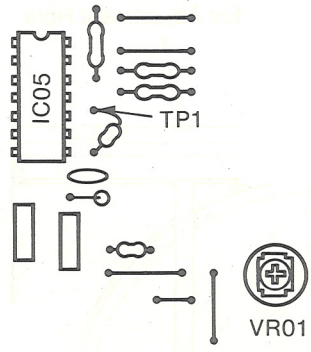

Fig. 9

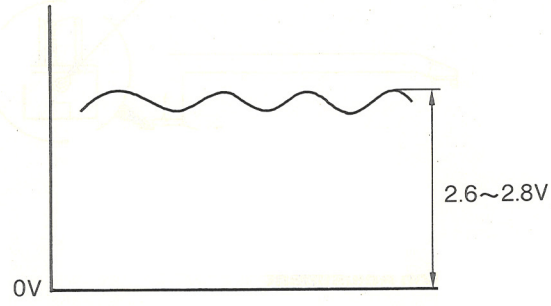

Fig. 10

SWITCH P.C.BOARD
(BOTTOM VIEW)

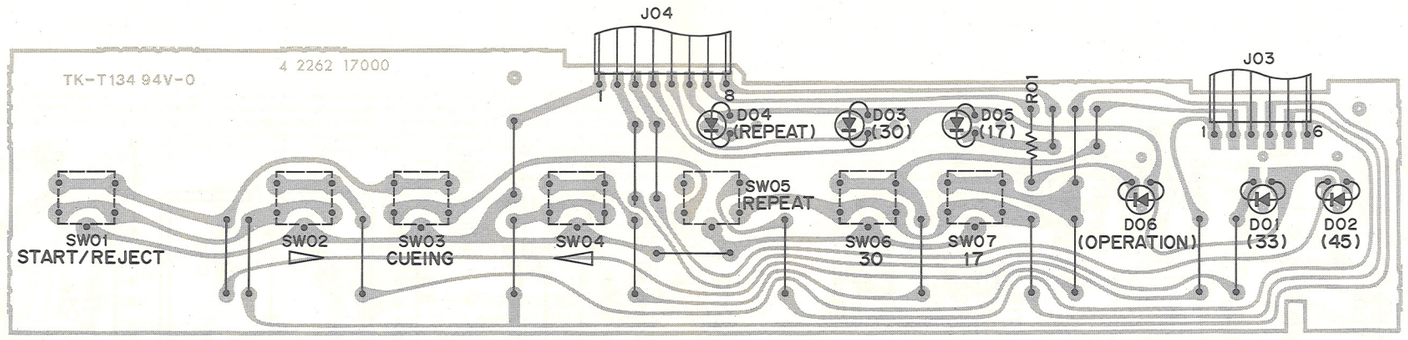

SPEED SWITCH P.C.BOARD
(BOTTOM VIEW)

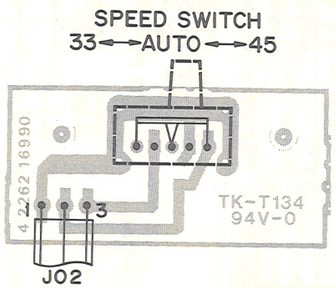

PTR P.C.BOARD
(BOTTOM VIEW)

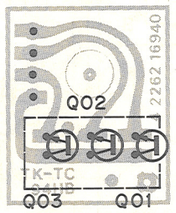

LED P.C.BOARD
(BOTTOM VIEW)

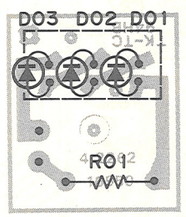

POWER INDICATOR P.C.BOARD
(BOTTOM VIEW)

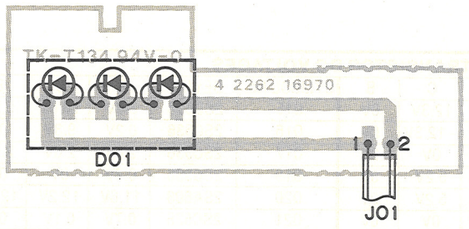

PCR P.C.BOARD
(BOTTOM VIEW)

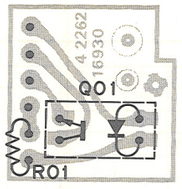

TERMINAL P.C.BOARD
(BOTTOM VIEW)

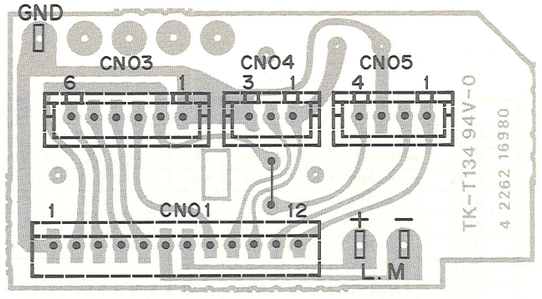

CONTROL P.C.BOARD

(BOTTOM VIEW)

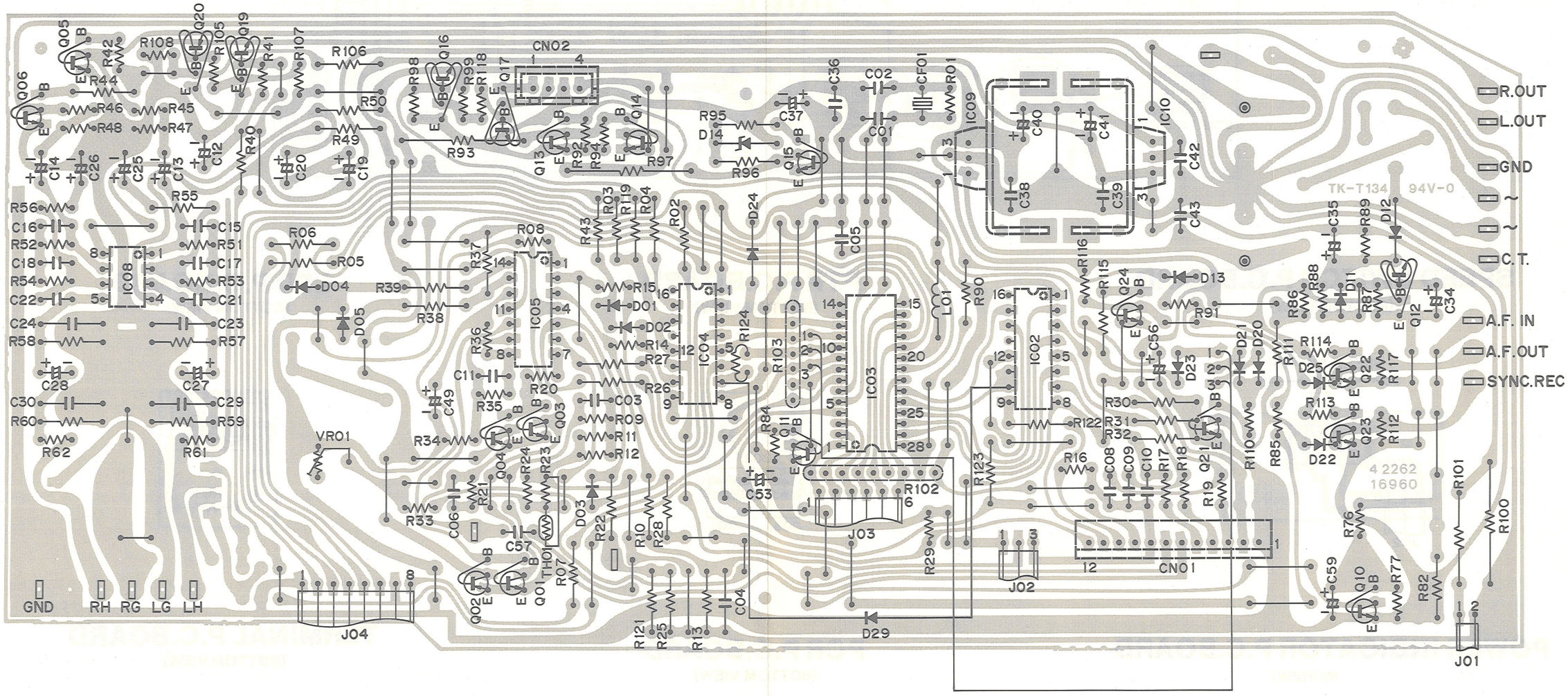

IC PIN NUMBERS DC VOLTAGES																					
SYMBOL No.	DEVICE	1	2	3	4	5	6	7	8	9	10	11	12	13	14	15	16	17	18	19	20
IC02	MSM4049RS	5.2V	0V	4.6V	5.2V	0V	5.2V	0V	0V	0V	5.2V	5.2V	0V	–	3.4V	0V	–				
IC04	MSM4049RS	5.2V	0V	5.0V	0V	5.0V	0V	5.0V	0V	5.0V	0V	5.2V	0.4V	–	0.4V	5.2V	–				
IC05	LA6324	−0.5V	0V	0V	12.3V	0V	0V	−0.6V	0V	0V	0V	−12.3V	0V	3.4V	−11.7V						
IC08	LA6458DS	0V	0V	0V	−9.0V	0V	0V	0V	9.0V												
IC09	NJM7812	15.9V	0V	12.3V																	
IC10	NJM7912	0V	−16.4V	−12.3V																	
IC03	LM6416E	5.2V	5.2V	5.2V	3.9V	2.5V	2.1V	5.2V	5.2V	5.0V	5.0V	5.0V	5.0V	0V	0V	3.6V	4.9V	4.8V	3.9V	5.2V	5.1V
		21	22	23	24	25	26	27	28												
		−0.6V	5.2V	0V	5.2V	0V	5.2V	5.2V	3.8V												

TRANSISTOR DC VOLTAGES									
SYMBOL No.	DEVICE	E	C	B	SYMBOL No.	DEVICE	E	C	B
Q01,03	2SD863	−0.5V	12.3V	0V	Q15	2SD863	5.8V	10.8V	5.2V
Q02,04	2SB764	−0.5V	−12.3V	0V	Q16	2SC536	0.2V	9.3V	0V
Q05,06	2SD1012	−0.7V	0V	0V	Q17	2SC536	2.6V	2.0V	2.0V
Q10	2SC536	0V	5.2V	0V	Q19	2SC536	0.7V	0V	0V
Q11	2SC536	0V	5.2V	0V	Q20	2SA608	11.6V	12.2V	12.3V
Q12	2SC536	0.6V	0V	0V	Q21	2SC536	0.7V	0.1V	0V
Q13	2SC536	0.7V	0.5V	0V	Q22,23	2SC536	0V	0V	0V
Q14	2SD863	0.5V	12.3V	1.2V	Q24	2SC536	0.7V	0.1V	0V

P.C.BOARD PARTS LIST

Ref. No.	Part No.	Description				Q'ty
	CONTROL P.C.B. ASSY					
PCB1	141 0 1939 02743	Control P.C.B. Assy				1
	4 2372 00060	Receptacle				17
	103 3 1903 00611	Screw, Brazier Hd. Tapping-2, +M3.0x6				2
	131 2 6201 21500	Plate Heat Sink (for IC09, IC10)				2
	131 2 9800 01040	Jumper				1
	131 2 9800 01041	Jumper				1
	131 2 9800 01058	Jumper				1
	131 2 9800 01099	Jumper				1
	131 2 9800 01029	Jumper				1
CN01	4 2369 71901	Connector 12P Top				1
CN02	4 2369 73140	Connector 4P				1
L01	4 2532 00540	Choke Coil 47μH				1
CF01	4 2252 00090	CSB400P				1
VR01	4 2222 02680	Semi Fixed (B-100kΩ)				1
IC02	4 2069 72530	IC, MSM 4049 RS				1
IC03	208 5 3806 41635	IC, LM6416E-352				1
IC04	4 2069 72530	IC, MSM 4049 RS				1
IC05	206 5 1296 32410	IC, LA 6324				1
IC08	206 5 2726 45810	IC, LA 6458 DS				1
IC09	4 2069 72560	IC, NJM 7812				1
IC10	4 2069 72570	IC, NJM 7912				1
Q01	203 5 7340 86350	Transistor, 2SD 863				1
Q02	203 5 7350 76450	Transistor, 2SB 764				1
Q03	203 5 7340 86350	Transistor, 2SD 863				1
Q04	203 5 7350 76450	Transistor, 2SB 764				1
Q05	203 5 4921 01260	Transistor, 2SD 1012				1
Q06	203 5 4921 01260	Transistor, 2SD 1012				1
Q10	203 5 5000 53650	Transistor, 2SC 536				1
Q11	203 5 5000 53650	Transistor, 2SC 536				1
Q12	203 5 5000 53650	Transistor, 2SC 536				1
Q13	203 5 5000 53670	Transistor, 2SC 536				1
Q14	203 5 7340 86350	Transistor, 2SD 863				1
Q15	203 5 7340 86350	Transistor, 2SD 863				1
Q16	203 5 5000 53650	Transistor, 2SC 536				1
Q17	203 5 5000 53660	Transistor, 2SC 536				1
Q19	203 5 5000 53650	Transistor, 2SC 536				1
Q20	203 5 7230 60850	Transistor, 2SA 608				1
Q21	203 5 5000 53650	Transistor, 2SC 536				1
Q22	203 5 5000 53650	Transistor, 2SC 536				1
Q23	203 5 5000 53650	Transistor, 2SC 536				1
Q24	203 5 5000 53650	Transistor, 2SC 536				1
D01	202 5 1410 00110	Diode, GMA 01				1
D02	202 5 1410 00110	Diode, GMA 01				1
D03	202 5 1410 00110	Diode, GMA 01				1
D04	202 5 1410 00110	Diode, GMA 01				1
D05	202 5 1410 00110	Diode, GMA 01				1
D11	202 5 1410 00110	Diode, GMA 01				1
D12	202 5 2470 13540	Diode, DS 135				1
D13	202 5 1410 00110	Diode, GMA 01				1
D14	202 5 3210 05613	Zener Diode, GZA5.6Z				1
D20	202 5 1410 00110	Diode, GMA 01				1
D21	202 5 1410 00110	Diode, GMA 01				1
D22	202 5 1410 00110	Diode, GMA 01				1
D23	202 5 1410 00110	Diode, GMA 01				1
D24	205 5 2810 44210	Diode, DS 442				1
D25	202 5 1410 00110	Diode, GMA 01				1
D29	205 5 2810 44210	Diode, DS 442				1
TH01	204 5 9000 05000	Thermistor, SDT 500				1
C01	CP2 2 1101 J003V	Polypropylen	220pF	100V	±5%	1
C02	CP2 2 1101 J003V	Polypropylen	220pF	100V	±5%	1
C03	CC3 3 1500 KD00C	Ceramic	330pF	50V	±10%	1
C04	CI1 0 3250 NF00R	Boundary	0.01μF	25V	±30%	1
C05	CM1 0 4500 J00TV	Mylar	0.1μF	50V	±5%	1

Ref. No.	Part No.	Description				Q'ty
C06	CC3 3 1500 KD00C	Ceramic	330pF	50V	±10%	1
C08	CM1 0 3500 K00SV	Mylar	0.01μF	50V	±10%	1
C09	CM1 0 3500 K00SV	Mylar	0.01μF	50V	±10%	1
C10	CM1 0 3500 K00SV	Mylar	0.01μF	50V	±10%	1
C11	CM1 0 3500 K00SV	Mylar	0.01μF	50V	±10%	1
C12	CD1 0 6160 0001V	Electrolytic	10μF	16V		1
C13	CD1 0 4500 0001V	Electrolytic	0.1μF	50V		1
C14	CD1 0 4500 0001V	Electrolytic	0.1μF	50V		1
C15	CM1 8 3500 K00SV	Mylar	0.018μF	50V	±10%	1
C16	CM1 8 3500 K00SV	Mylar	0.018μF	50V	±10%	1
C17	CM4 7 2500 K00SV	Mylar	0.0047μF	50V	±10%	1
C18	CM4 7 2500 K00SV	Mylar	0.0047μF	50V	±10%	1
C19	CD1 0 7160 0001V	Electrolytic	100μF	16V		1
C20	CD1 0 7160 0001V	Electrolytic	100μF	16V		1
C21	CC1 0 1500 KD00C	Ceramic	100pF	50V	±10%	1
C22	CC1 0 1500 KD00C	Ceramic	100pF	50V	±10%	1
C23	CC1 0 1500 JD00R	Ceramic	100pF	50V	±5%	1
C24	CC1 0 1500 JD00R	Ceramic	100pF	50V	±5%	1
C25	CD4 7 6100 0001V	Electrolytic	47μF	10V		1
C26	CD4 7 6100 0001V	Electrolytic	47μF	10V		1
C27	CD4 7 5250 0001V	Electrolytic	4.7μF	25V		1
C28	CD4 7 5250 0001V	Electrolytic	4.7μF	25V		1
C29	CC1 0 1500 JD00R	Ceramic	100pF	50V	±5%	1
C30	CC1 0 1500 JD00R	Ceramic	100pF	50V	±5%	1
C34	CD4 7 6250 0001V	Electrolytic	47μF	25V		1
C35	CD4 7 5500 0001V	Electrolytic	4.7μF	50V		1
C36	CM1 0 4500 J00TV	Mylar	0.1μF	50V	±5%	1
C37	CD4 7 6100 0001V	Electrolytic	47μF	10V		1
C38	CM1 0 4500 J00TV	Mylar	0.1μF	50V	±5%	1
C39	CM1 0 4500 J00TV	Mylar	0.1μF	50V	±5%	1
C40	CD1 0 7160 0001V	Electrolytic	100μF	16V		1
C41	CD1 0 7160 0001V	Electrolytic	100μF	16V		1
C42	CC1 0 3500 ZG00C	Ceramic	0.01μF	50V	+80,-20%	1
C43	CC1 0 3500 ZG00C	Ceramic	0.01μF	50V	+80,-20%	1
C49	CD4 7 5250 0001V	Electrolytic	4.7μF	25V		1
C53	CD1 0 4500 0001V	Electrolytic	0.1μF	50V		1
C56	CD2 2 5500 0001V	Electrolytic	2.2μF	50V		1
C57	CM1 0 3500 K00SV	Mylar	0.01μF	50V	±10%	1
C59	CD1 0 5500 0001V	Electrolytic	1μF	50V		1
R01	RD1 0 5161 JH000	Carbon	1MΩ	1/6W	±5%	1
R02	RD1 0 3251 JM000	Carbon	10kΩ	1/4W	±5%	1
R03	RD3 3 1251 JM000	Carbon	330Ω	1/4W	±5%	1
R04	RD3 3 1251 JM000	Carbon	330Ω	1/4W	±5%	1
R05	RD3 3 1251 JM000	Carbon	330Ω	1/4W	±5%	1
R06	RD1 5 1251 JM000	Carbon	150Ω	1/4W	±5%	1
R07	RD3 3 1251 JM000	Carbon	330Ω	1/4W	±5%	1
R08	RD2 2 2161 JH000	Carbon	2.2kΩ	1/6W	±5%	1
R09	RD1 0 2161 JH000	Carbon	1kΩ	1/6W	±5%	1
R10	RD4 7 1251 JM000	Carbon	470Ω	1/4W	±5%	1
R11	RD4 7 1161 JH000	Carbon	470Ω	1/6W	±5%	1
R12	RD4 7 1161 JH000	Carbon	470Ω	1/6W	±5%	1
R13	RD3 9 A251 JM000	Carbon	3.9Ω	1/4W	±5%	1
R14	RD2 7 2161 JH000	Carbon	2.7kΩ	1/6W	±5%	1
R15	RD8 2 1161 JH000	Carbon	820Ω	1/6W	±5%	1
R16	RD1 0 3161 JH000	Carbon	10kΩ	1/6W	±5%	1
R17	RD1 0 3161 JH000	Carbon	10kΩ	1/6W	±5%	1
R18	RD1 0 3161 JH000	Carbon	10kΩ	1/6W	±5%	1
R19	RD1 0 3161 JH000	Carbon	10kΩ	1/6W	±5%	1
R20	RD2 2 2161 JH000	Carbon	2.2kΩ	1/6W	±5%	1
R21	RD1 0 2161 JH000	Carbon	1kΩ	1/6W	±5%	1
R22	RD4 7 1251 JM000	Carbon	470Ω	1/4W	±5%	1
R23	RD4 7 1161 JH000	Carbon	470Ω	1/6W	±5%	1
R24	RD4 7 1161 JH000	Carbon	470Ω	1/6W	±5%	1
R25	RD4 7 A251 JM000	Carbon	4.7Ω	1/4W	±5%	1

P.C.BOARD PARTS LIST (Continued)

Ref. No.	Part No.	Description				Q'ty
R26	RD3 9 2251 JM000	Carbon	3.9kΩ	1/4W	±5%	1
R27	RD1 2 2251 JM000	Carbon	1.2kΩ	1/4W	±5%	1
R28	RD3 3 2251 JM000	Carbon	3.3kΩ	1/4W	±5%	1
R29	RD3 3 2161 JH000	Carbon	3.3kΩ	1/6W	±5%	1
R30	RD1 0 4251 JM000	Carbon	100kΩ	1/4W	±5%	1
R31	RD1 0 4251 JM000	Carbon	100kΩ	1/4W	±5%	1
R32	RD1 0 4251 JM000	Carbon	100kΩ	1/4W	±5%	1
R33	RD4 7 3161 JH000	Carbon	47kΩ	1/6W	±5%	1
R34	RD2 7 3161 JH000	Carbon	27kΩ	1/6W	±5%	1
R35	RD1 2 4161 JH000	Carbon	120kΩ	1/6W	±5%	1
R36	RD4 7 3251 JM000	Carbon	47kΩ	1/4W	±5%	1
R37	RD2 2 3251 JM000	Carbon	22kΩ	1/4W	±5%	1
R38	RD8 2 2251 JM000	Carbon	8.2kΩ	1/4W	±5%	1
R39	RD2 2 3251 JM000	Carbon	22kΩ	1/4W	±5%	1
R40	RD2 2 3251 JM000	Carbon	22kΩ	1/4W	±5%	1
R41	RD2 2 3161 JH000	Carbon	22kΩ	1/6W	±5%	1
R42	RD1 0 3161 JH000	Carbon	10kΩ	1/6W	±5%	1
R43	RD1 0 3251 JM000	Carbon	10kΩ	1/4W	±5%	1
R44	RD1 0 3251 JM000	Carbon	10kΩ	1/4W	±5%	1
R45	RD1 0 2161 JH000	Carbon	1kΩ	1/6W	±5%	1
R46	RD1 0 2161 JH000	Carbon	1kΩ	1/6W	±5%	1
R47	RD1 0 4161 JH000	Carbon	100kΩ	1/6W	±5%	1
R48	RD1 0 4161 JH000	Carbon	100kΩ	1/6W	±5%	1
R49	RD1 0 2251 JM000	Carbon	1kΩ	1/4W	±5%	1
R50	RD1 0 2251 JM000	Carbon	1kΩ	1/4W	±5%	1
R51	RD2 2 4161 JH000	Carbon	220kΩ	1/6W	±5%	1
R52	RD2 2 4161 JH000	Carbon	220kΩ	1/6W	±5%	1
R53	RD1 5 3161 JH000	Carbon	15kΩ	1/6W	±5%	1
R54	RD1 5 3161 JH000	Carbon	15kΩ	1/6W	±5%	1
R55	RD3 3 1251 JM000	Carbon	330Ω	1/4W	±5%	1
R56	RD3 3 1161 JH000	Carbon	330Ω	1/6W	±5%	1
R57	RD1 0 4251 JM000	Carbon	100kΩ	1/4W	±5%	1
R58	RD1 0 4251 JM000	Carbon	100kΩ	1/4W	±5%	1
R59	RD1 0 4251 JM000	Carbon	100kΩ	1/4W	±5%	1
R60	RD1 0 4251 JM000	Carbon	100kΩ	1/4W	±5%	1
R61	RD1 0 2161 JH000	Carbon	1kΩ	1/6W	±5%	1
R62	RD1 0 2161 JH000	Carbon	1kΩ	1/6W	±5%	1
R76	RD4 7 3161 JH000	Carbon	47kΩ	1/6W	±5%	1
R77	RD6 8 2161 JH000	Carbon	6.8kΩ	1/6W	±5%	1
R82	RD1 0 4251 JM000	Carbon	100kΩ	1/4W	±5%	1
R84	RD1 0 3161 JH000	Carbon	10kΩ	1/6W	±5%	1
R85	RD4 7 3161 JH000	Carbon	47kΩ	1/6W	±5%	1
R86	RD1 0 3161 JH000	Carbon	10kΩ	1/6W	±5%	1
R87	RD1 0 3161 JH000	Carbon	10kΩ	1/6W	±5%	1
R88	RD6 8 3161 JH000	Carbon	68kΩ	1/6W	±5%	1
R89	RD6 8 2161 JH000	Carbon	6.8kΩ	1/6W	±5%	1
R90	RD2 2 3251 JM000	Carbon	22kΩ	1/4W	±5%	1
R91	RD2 2 3161 JH000	Carbon	22kΩ	1/6W	±5%	1
R92	RD2 2 3161 JH000	Carbon	22kΩ	1/6W	±5%	1
R93	RH4 7 1102 JZ000	Metal	470Ω	1W	±5%	1
R94	RD1 0 3161 JH000	Carbon	10kΩ	1/6W	±5%	1
R95	RD2 2 1251 JM000	Carbon	220Ω	1/4W	±5%	1
R96	RD6 8 1251 JM000	Carbon	680Ω	1/4W	±5%	1
R97	RH3 9 0102 JZ000	Metal	39Ω	1W	±5%	1
R98	RD2 2 3161 JH000	Carbon	22kΩ	1/6W	±5%	1
R99	RD1 0 3161 JH000	Carbon	10kΩ	1/6W	±5%	1
R100	RH3 3 1102 JZ000	Metal	330Ω	1W	±5%	1
R101	RH4 7 1501 JZ000	Metal	470Ω	1/2W	±5%	1
R102	4 2219 70460	Resistor 10k x 8 J				1
R103	4 2219 70450	Resistor 10k x 6 J				1
R105	RD2 2 3161 JH000	Carbon	22kΩ	1/6W	±5%	1
R106	RD1 0 3251 JM000	Carbon	10kΩ	1/4W	±5%	1
R107	RD1 0 3161 JH000	Carbon	10kΩ	1/6W	±5%	1
R108	RD1 0 3161 JH000	Carbon	10kΩ	1/6W	±5%	1
R110	RD1 0 4161 JH000	Carbon	100kΩ	1/6W	±5%	1
R111	RD3 3 2251 JM000	Carbon	3.3kΩ	1/4W	±5%	1
R112	RD2 2 3161 JH000	Carbon	22kΩ	1/6W	±5%	1
R113	RD1 0 4161 JH000	Carbon	100kΩ	1/6W	±5%	1
R114	RD1 0 4161 JH000	Carbon	100kΩ	1/6W	±5%	1
R115	RD1 0 4251 JM000	Carbon	100kΩ	1/4W	±5%	1
R116	RD3 3 2161 JH000	Carbon	3.3kΩ	1/6W	±5%	1
R117	RD2 2 3161 JH000	Carbon	22kΩ	1/6W	±5%	1
R118	RD2 2 3161 JH000	Carbon	22kΩ	1/6W	±5%	1
R119	RD2 2 3251 JM000	Carbon	22kΩ	1/4W	±5%	1
R121	RD1 0 1251 JM000	Carbon	100Ω	1/4W	±5%	1
R122	RD1 0 3251 JM000	Carbon	10kΩ	1/4W	±5%	1
R123	RD1 0 3251 JM000	Carbon	10kΩ	1/4W	±5%	1
R124	RD1 0 3251 JM000	Carbon	10kΩ	1/4W	±5%	1
	PCR P.C.B. ASSY					
PCB2	141 0 1939 02710	PCR P.C.B. Assy				1
CN05	4 2359 76742	Connector 4P Assy				1
Q01	4 2039 71430	Photo Interrupter				1
R01	RD5 6 1251 JN000	Carbon	560Ω	1/4W	±5%	1
	PTR P.C.B. ASSY					
PCB3	141 0 1939 02721	PTR P.C.B. Assy				1
	141 2 3529 38900	LED Spacer				1
CN03	4 2359 76606	Connector 6P Assy				1
Q01	4 2039 71500	Photo TR SPS-103-01				1
Q02	4 2039 71500	Photo TR SPS-103-01				1
Q03	4 2039 71500	Photo TR SPS-103-01				1
	LED P.C.B. ASSY					
PCB4	141 0 1939 02731	LED P.C.B. Assy				1
	141 2 3529 38900	LED Spacer				1
D01	4 2029 73160	Photo D. SLR-902A-01				1
D02	4 2029 73160	Photo D. SLR-902A-01				1
D03	4 2029 73160	Photo D. SLR-902A-01				1
R01	RD5 6 1251 JM000	Carbon	560Ω	1/4W	±5%	1
	POWER INDICATOR P.C.B. ASSY					
PCB5	141 0 1939 02750	Power Indicator P.C.B. Assy				1
D01	4 2029 73010	LED SLF-206B				1
	TERMINAL P.C.B. ASSY					
PCB6	141 0 1939 02760	Terminal P.C.B. Assy				1
	4 2372 00060	Receptacle				3
CN01	4 2369 71901	Connector 12P Top				1
CN03	4 2369 73160	Connector 6P				1
CN04	4 2369 73130	Connector 3P				1
CN05	4 2369 73140	Connector 4P				1
	SPEED SWITCH P.C.B. ASSY					
PCB7	141 0 1939 02770	Speed Switch P.C.B. Assy				1
	141 2 3529 43500	Spacer				1
SW08	4 2319 76670	Slide Switch 1P3T (Speed)				1

P.C.BOARD PARTS LIST (Continued)

Ref. No.	Part No.	Description	Q'ty
	SWITCH P.C.B. ASSY		
PCB8	141 0 1939 02780	Switch P.C.B. Assy	1
	141 2 3529 40800	Spacer(a)	3
	141 2 3529 40900	Spacer(b)	3
SW01	4 2312 05801	Key Board Switch (Start/Reject)	1
SW02	4 2312 05801	Key Board Switch (▷)	1
SW03	4 2312 05801	Key Board Switch (Cueing)	1
SW04	4 2312 05801	Key Board Switch (◁)	1
SW05	4 2312 05801	Key Board Switch (Repeat)	1
SW06	4 2312 05801	Key Board Switch (30)	1
SW07	4 2312 05801	Key Board Switch (17)	1
D01	DYY - SLR- 54VT-	LED, SLR 54 VT 3 (33rpm)	1
D02	DYY - SLR- 54VT-	LED, SLR 54 VT 3 (45rpm)	1
D03	DYY - SLR- 54VT-	LED, SLR 54 VT 3 (30cm)	1
D04	DYY - SLR- 54PT-	LED, SLR 54 PT 3 (Repeat)	1
D05	DYY - SLR- 54VT-	LED, SLR 54 VT 3 (17cm)	1
D06	DYY - SLR- 54PT-	LED, SLR 54 PT 3 (Operation)	1
R01	RD1 5 1251 JM000	Carbon 150Ω 1/4W ±5%	1

1. Parts order must contain Model Number, Part Number and Description.
2. Ordering quantity of screws and resistors must be multiple of 10 pcs.

SEMICONDUCTOR LEAD IDENTIFICATION

INTEGRATED CIRCUITS

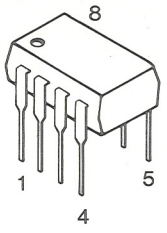

- LA 6458 DS

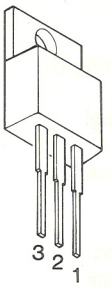

- NJM 7812
- NJM 7912

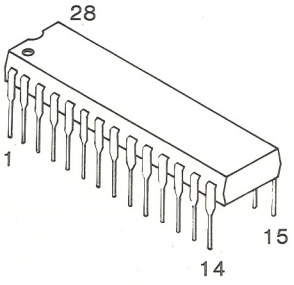

- LM 6416 E-352

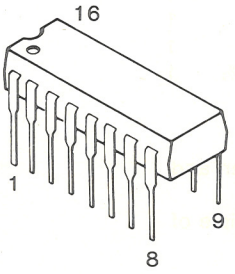

- MSM 4049 RS

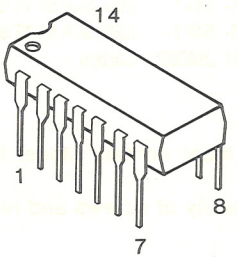

- LA 6324

BI-POLAR TRANSISTORS

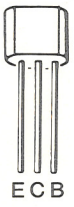

- 2SA 608
- 2SC 536

- 2SD 1012

- 2SB 764
- 2SD 863

DIODES

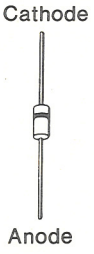

- DS 135 D
- DS 442
- GMA 01
- GZA 5.6 Z

SCHEMATIC DIAGRAM

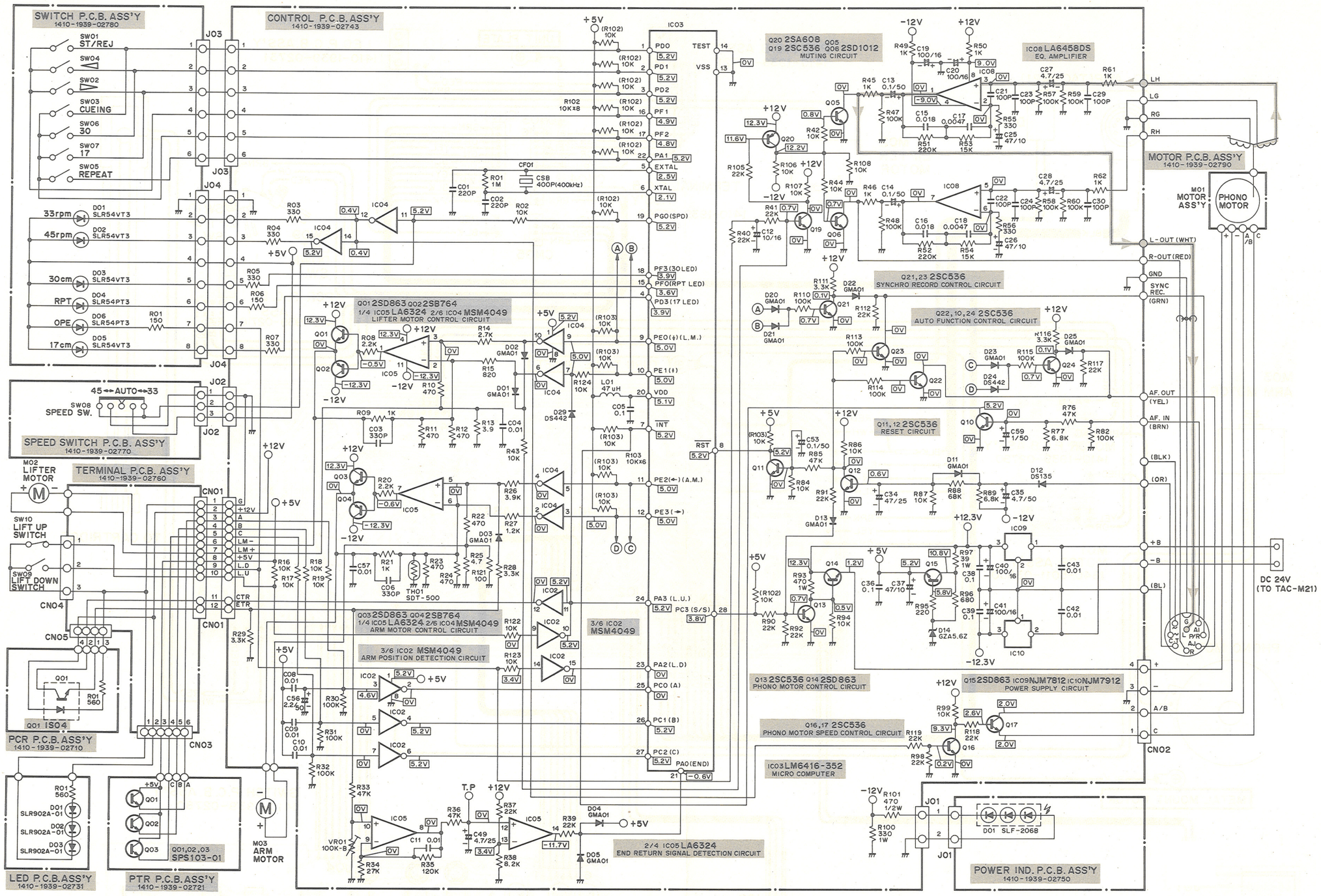

No.	Name	Position	No.	Name	Position
SW01	START / REJECT Switch	OFF	SW06	DISC SIZE Switch (30)	OFF
SW02	REVERSE Switch (►)	OFF	SW07	DISC SIZE Switch (17)	OFF
SW03	CUEING Switch	OFF	SW08	SPEED SELECT Switch	AUTO
SW04	FORWARD Switch (◄)	OFF	SW09	LIFT DOWN Switch	OFF
SW05	REPEAT Switch	OFF	SW10	LIFT UP Switch	ON

NOTES:

1. All resistors values are indicated in "ohm" ($K=10^3$, $M=10^6$).
2. All capacitors values are indicated in "μF" ($P=10^{-12}$).
3. All voltages indicated on the schematics are measured under the following conditions.
   a. Use a V.T.V.M.
   b. All voltages ±10 % with respect to chassis ground
   c. No signals at input terminals
4. This is a basic schematic diagram.

Because Fisher products are subject to continuous improvement, Fisher Corporation reserves the right to make any changes or modifications without notice.
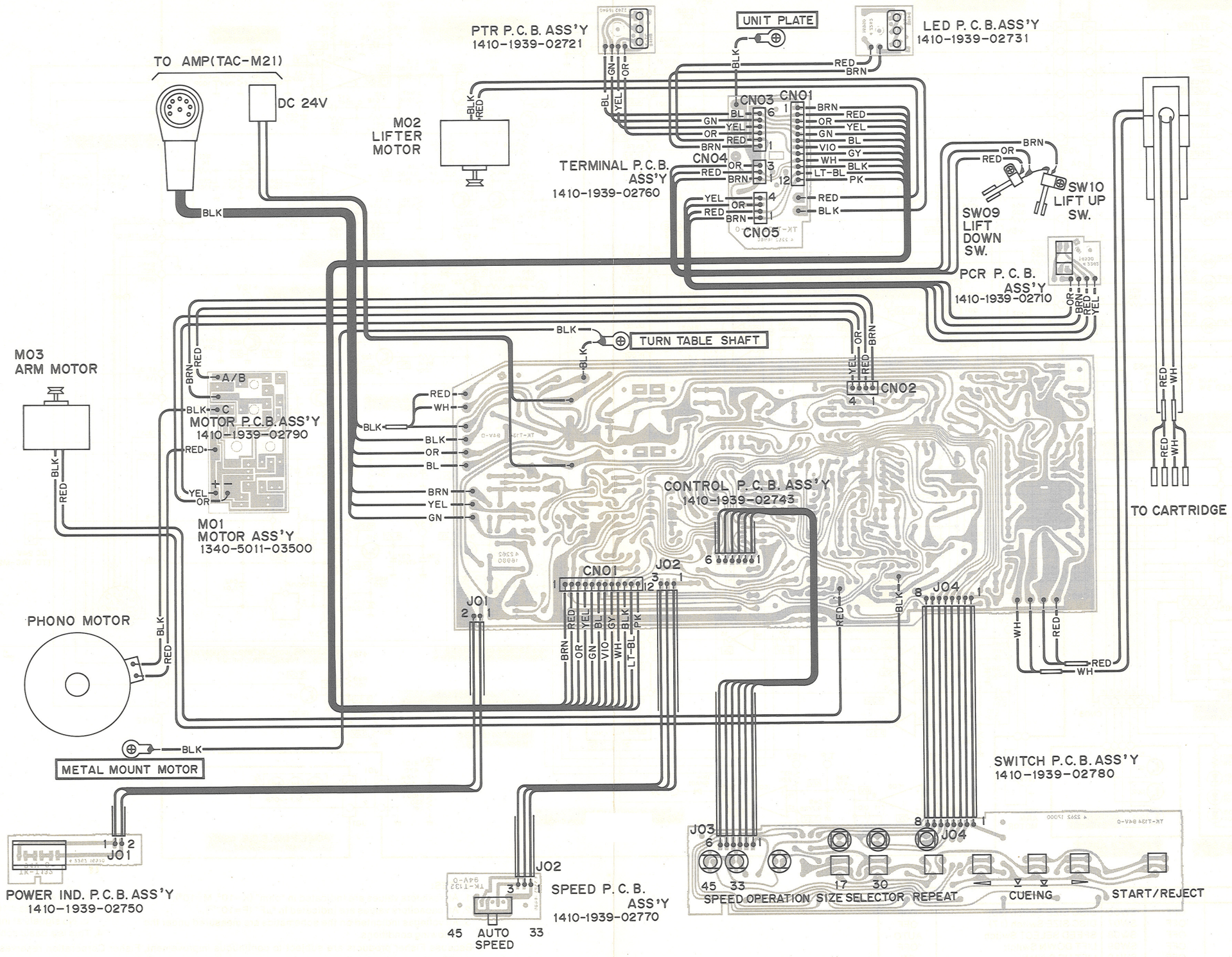
POINT TO POINT WIRING DIAGRAM